# Keor MP

## THREE-PHASE UPS
## 10 - 200 kVA

#legrandImprovingLives

legrand®

# SUSTAINABILITY

## CORPORATE SOCIAL RESPONSIBILITY

Green management and sustainable supply chain: these concepts are part of Legrand's Corporate Social Responsibility, which is the company's commitment to drawing up a strategy and implementing it with practical actions aimed at socially responsible behaviour towards everything around it, such as people, things and environment.
CSR involves the management of human resources, the organisation and division of labour and the management of natural resources. CSR aims to assess the impact that the company's actions and decisions have internally, but also externally, on the stakeholders and the environment.

**BUSINESS ECOSYSTEM**
or how Legrand interacts ethically with the whole ecosystem of its activities.

**PEOPLE**
or how Legrand engages with all of its employees and stakeholders.

**ENVIRONMENT**
or how Legrand intends to limit the Group's environmental impact.

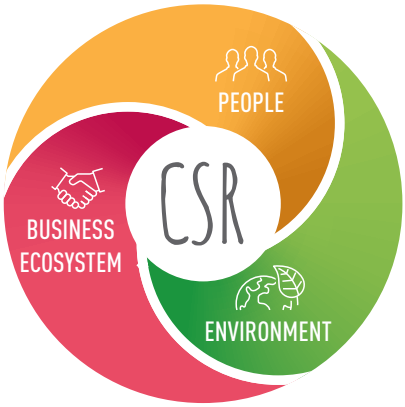


## CIRCULAR ECONOMY

We are committed to creating a system that involves all stakeholders to share values, objectives and actions in order to control and reduce the environmental impact of all our economic and production processes, reduce waste and environmental impact and transform what would once have been defined as «waste» into new resources.
Controlling these aspects has an impact on the entire life cycle of the product, starting from the design of new concepts and new specifications for the materials the UPS is made of; this is possible through responsible design and procurement processes (so-called «green procurement»), with a strong focus on research and the use of innovative materials from the circular economy and alternative raw materials. When a product ends its life, all these materials can become high value-added resources that can be used in other production cycles.

## DIGITALISATION

Many of our documents are now available in a digital format to view on a PC or smartphone, not only making them always accessible but also reducing the amount of paper we use.
Digitalisation also becomes an important driver of the circular economy, since it allows the use of tools for performance data analysis and preventive diagnostics, both useful for optimising the life cycle and durability of the product.

## EFFICIENCY

Our R&D team is constantly working on the development of increasingly efficient UPSs that allow high and incremental performance with minimum energy dissipation; with regard to $CO_2$ emissions, we are implementing processes and products that represent an improvement in the percentage of carbon footprint compared to the past.
But efficiency is not only synonymous with high performance.
For us, efficiency also means ecodesign: this implies that the UPS is designed to be easily repaired, maintained and it's easy to separate its components.
This means increasing the durability of our UPSs and the possibility of reusing and recycling them at the end of their life.

## EPD/PEP

For each product family we draw up an EPD (Environmental Product Declaration) or PEP (Profil Environnemental Produit) in line with ISO 14025: it is a declaration that is a sort of environmental photograph of the product.
The EPD is drawn up according to the concept of Life Cycle Assessment: it examines the environmental impact of a product throughout its life cycle, from the development of product specifications to the choice of materials to be used and the end-of-life destination of the product itself.

UPservice contains the full documentation of UPS products in digital format. This tool allows to reduce the use of paper documents in favour of the digital format for the benefit of a lower environmental impact. Visit our website **ups.legrand.com** to download the app.

SUPPORTED BY UPSERVICE

Keor MP

# ENGINEERED ARO
# COMPACT INTEGR

10-80
kVA

INTERNAL BATTERY CONFIGURATION

# UND
# ATION

**Keor MP** is a compact and space-efficient three-phase **UPS platform**, engineered to simplify installation, operation, and maintenance while ensuring reliable power continuity for modern critical infrastructure.

**60-200**
**kVA**

# Keor MP

## ENGINEERED FOR EASY INSTALLATION

- Easy installation guaranteed by front access to all wiring connections.
- Availability of standard configurations with batteries inside the UPS.
- Designed to easily connect an additional battery cabinet to obtain long back-up time.
- Standard internal backfeed protection which provides easy installation without additional cost in UPS supply switchboard.

## REDUCTION OF TOTAL COST OWNERSHIP (TCO)

Thanks to its design features and the high level of efficiency (up to 96%), there is a reduction of TCO, even from the installation phase; the key factors that allow you to gain these advantages are:

- Transformerless Design- High Efficiency
- Reduced dimensions and power use for air conditioning
- Low Output Total Harmonic  Distortion (THDV).

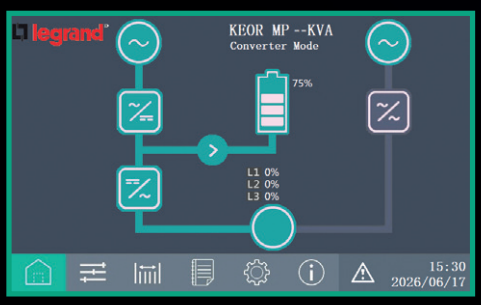


## MULTICOLOR INTUITIVE TOUCHSCREEN DISPLAY

The Keor MP features a user-friendly touchscreen display with graphical representations of system
status and performance, ensuring instant visibility
and seamless monitoring and control.
Users can access real-time status indications,
configure settings, and respond to alerts with ease.

## PARALLEL SCALABILITY AND REDUNDANCY

**The parallel connections between the UPS's allow different levels of redundancy hence the maximum continuity of service**

**Keor MP** allows N+X redundancy up to six UPSs in parallel operation and is scalable up to 1.2MW, effectively reducing the risk of downtime. The Load Bus Synchronization (LBS) allows the UPS to be connected with two different sources.

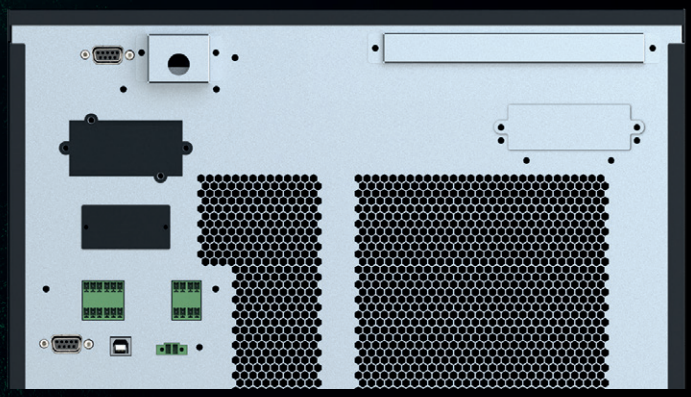

Communication features:

- Standard RS232
- ModBus
- Programmable dry contacts
- EPO & GenSet and Remote Monitoring Panel
- USB Converter (optional)
- Internal SNMP solutions (optional)

# Keor MP

## 10-80 kVA Internal battery configuration

### FEATURES

- Wheels for effortless movement
- Compact and space- saving design
- Internal batteries up to 120 blocks
- External battery cabinets for extended autonomy
- Efficiency up to 96%
- PF=1
- 5-inch touch screen display (10-40kVA) and 7-inch touch screen display (60-80kVA)

### COLD START FUNCTION

- Enables UPS startup without utility input
- Supports emergency power availability
- Improves operational flexibility

### REGENERATIVE LOAD COMPATIBILITY

Capable of absorbing regenerative energy, minimizing impact on upstream systems and improving energy efficiency

### Safe and fast battery installation

The Battery drawers system allows:
- safe physical transport of battery and fast mounting on site
- safe and easy connection of individual battery strings outside of the cabinet
- lower UPS downtime for battery replacement

# 60-200 kVA

## FEATURES

- Compact and space-saving design
- Power factor 1
- 7-inch touch screen display
- Efficiency up to 96%
- Module-Based Architecture for Low MTTR and High MTBF
- VRLA and Lion battery compatibility
- Dry Contact port for Signaling & Alerts
- Wide Communication Options

### SELF-LOADING FEATURE

The self-loading feature allows for on-site testing of UPS before connecting it to the load.

### COMMON BATTERY BANK

Keor MP features a common battery bank that can be shared between two units, optimizing resource utilization, and providing enhanced flexibility in configuring reliable power backup solutions tailored to diverse operational requirements.

# Keor MP 10 – 80 kVA

**Three- Phase UPS**

**Characteristics**

- Power factor correction PFC (input PF>0,99)
- User friendly 5'' and 7'' touch screen display
- Wide input voltage range and frequency
- Dual Input
- Cold Start
- Backfeed contact for external Protection
- Parallel Operation up to 4 units
- Wide configurations of Internal Batteries embedded
- VRLA (3Wire) 40 blocks
- Overload & short circuit protection
- Powerful Built-in Charger up to 12 and 18A
- Embedded RS232, RS485, SNMPSlot, parallel port, dry contact
- Wheels for easy movement

## UPS

| Item | Power (kW) | Description | Standard Autonomy (min) | CoC Eu 100% Load PF0,8 |
|---|---|---|---|---|
| 3 114 25 | 10 | Keor MP 10KVA - 0 | 0 | 0 |
| 3 114 26 | 10 | Keor MP 10KVA - 1 | 18 | 14 |
| 3 114 27 | 10 | Keor MP 10KVA – 2 | 50 | 32 |
| 3 114 28 | 10 | Keor MP 10KVA – 3 | 71 | 57 |
| 3 114 29 | 15 | Keor MP 15KVA – 0 | 0 | 0 |
| 3 114 30 | 15 | Keor MP 15KVA – 1 | 10 | 7 |
| 3 114 31 | 15 | Keor MP 15KVA – 2 | 26 | 19 |
| 3 114 32 | 15 | Keor MP 15KVA – 3 | 50 | 33 |
| 3 114 33 | 20 | Keor MP 20KVA – 0 | 0 | 0 |
| 3 114 34 | 20 | Keor MP 20KVA – 1 | 6 | 4 |
| 3 114 35 | 20 | Keor MP 20KVA – 2 | 19 | 14 |
| 3 114 36 | 20 | Keor MP 20KVA – 3 | 30 | 23 |
| 3 114 37 | 30 | Keor MP 30kVA – 0 | 0 | 0 |
| 3 114 38 | 30 | Keor MP 30kVA – 1 | 11 | 7 |
| 3 114 39 | 30 | Keor MP 30kVA – 2 | 19 | 14 |
| 3 114 40 | 40 | Keor MP 40kVA – 0 | 0 | 0 |
| 3 114 41 | 40 | Keor MP 40kVA – 1 | 9 | 8 |
| 3 114 42 | 40 | Keor MP 40kVA – 2 | 12 | 13 |
| 3 114 43 | 60 | Keor MP 60KVA – 0 | 0 | 0 |
| 3 114 44 | 60 | Keor MP 60KVA – 1 | 10 | 8 |
| 3 114 45 | 60 | Keor MP 60KVA – 2 | 15 | 12 |
| 3 114 46 | 80 | Keor MP 80KVA – 0 | 0 | 0 |
| 3 114 47 | 80 | Keor MP 80KVA – 1 | 10 | 8 |

## Battery Cabinets

| Item | Power (kW) | Description | No. String |
|---|---|---|---|
| 3 114 48 | 10-20kVA | Keor MP Batt Cabinet 10-20kVA Empty | 0 |
| 3 114 49 | 40-30 KVA | Keor MP Batt Cabinet 30-40kVA Empty | 0 |
| 3 114 50 | 10-20kVA | Keor MP Batt Cabinet 10-20kVA-1 | 1 |
| 3 114 51 | 10-20kVA | Keor MP Batt Cabinet 10-20kVA-2 | 2 |
| 3 114 52 | 30 KVA | Keor MP Batt Cabinet 30kVA | 2 |
| 3 114 53 | 40 KVA | Keor MP Batt Cabinet 40kVA | 2 |

## Accessories

| Item | |
|---|---|
| 3 115 45 | Signal card |
| 3 114 54 | Temp probe for models 10-40kVA |
| 3 115 46 | Temp probe for models 60-80kVA |
| 3 115 47 | Regenerative energy box for models 10-40kVA |
| 3 115 48 | Regenerative energy box for models 60-80kVA |

NOTE: the stated back-up times in minutes are estimated and may vary according to the load characteristics, operating conditions and environment.

# Keor MP 10 – 80 kVA

**Three- Phase UPS**

## Characteristics

**Keor MP 10-40**

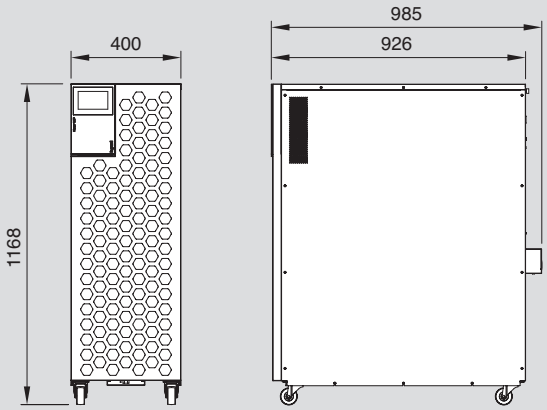


**Battery Cabinet**

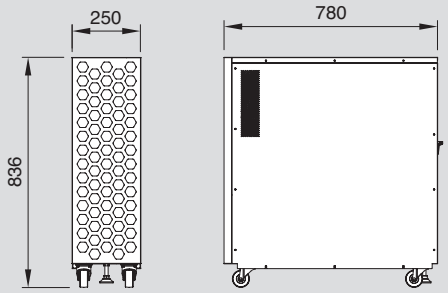


**Keor MP 60-80**

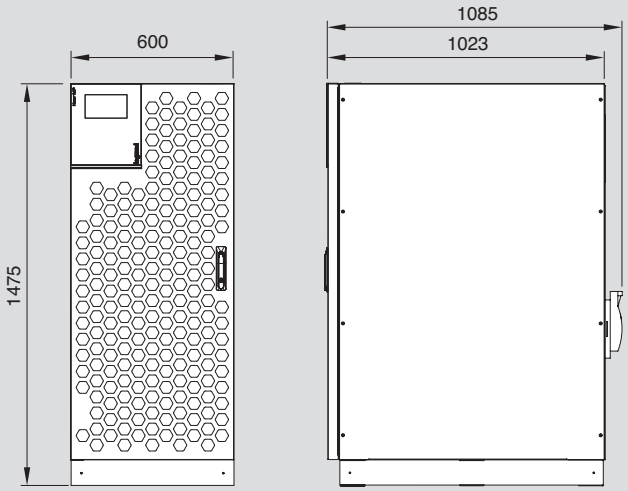

# Keor MP 10 – 80 kVA

**Three- Phase UPS**

## Long autonomy configuration

| Power (kVA) | Standard Autonomy (min) CoC EU | Item | Description | Quantity |
|---|---|---|---|---|
| **10** | 78 | 3 114 28 | Keor MP 10KVA - 3 | 1 |
| | | 3 114 50 | Keor MP BATT CABINET 10-20kVA-1 | 1 |
| **10** | 100 | 3 114 28 | Keor MP10KVA - 3 | 1 |
| | | 3 114 51 | Keor MP BATT CABINET 10-20kVA-2 | 1 |
| **10** | 119 | 3 114 28 | Keor MP 10KVA - 3 | 1 |
| | | 3 114 50 | Keor MP BATT CABINET 10-20kVA-1 | 1 |
| | | 3 114 51 | Keor MP BATT CABINET 10-20kVA-2 | 1 |
| **10** | 149 | 3 114 28 | Keor MP 10KVA - 3 | 1 |
| | | 3 114 51 | Keor MP BATT CABINET 10-20kVA-2 | 2 |
| **10** | 171 | 3 114 28 | Keor MP10KVA - 3 | 1 |
| | | 3 114 50 | Keor MP BATT CABINET 10-20kVA-1 | 1 |
| | | 3 114 51 | Keor MP BATT CABINET 10-20kVA-2 | 2 |
| **10** | 196 | 3 114 28 | Keor MP 10KVA - 3 | 1 |
| | | 3 114 51 | Keor MP BATT CABINET 10-20kVA-2 | 3 |
| **15** | 53 | 3 114 32 | Keor MP 15KVA - 3 | 1 |
| | | 3 114 50 | Keor MP BATT CABINET 10-20kVA-1 | 1 |
| **15** | 60 | 3 114 32 | Keor MP 15KVA - 3 | 1 |
| | | 3 114 51 | Keor MP BATT CABINET 10-20kVA-2 | 1 |
| **15** | 78 | 3 114 32 | Keor MP 15KVA – 3 | 1 |
| | | 3 114 50 | Keor MP BATT CABINET 10-20kVA-1 | 1 |
| | | 3 114 51 | Keor MP BATT CABINET 10-20kVA-2 | 1 |
| **15** | 90 | 3 114 32 | Keor MP 15KVA – 3 | 1 |
| | | 3 114 51 | Keor MP BATT CABINET 10-20kVA-2 | 2 |
| **15** | 107 | 3 114 32 | Keor MP 15KVA – 3 | 1 |
| | | 3 114 50 | Keor MP BATT CABINET 10-20kVA-1 | 1 |
| | | 3 114 51 | Keor MP BATT CABINET 10-20kVA-2 | 2 |
| **15** | 119 | 3 114 32 | Keor MP 15KVA – 3 | 1 |
| | | 3 114 51 | Keor MP BATT CABINET 10-20kVA-2 | 3 |
| **20** | 33 | 3 114 36 | Keor MP 20KVA – 3 | 1 |
| | | 3 114 50 | Keor MP BATT CABINET 10-20kVA-1 | 1 |
| **20** | 51 | 3 114 36 | Keor MP 20KVA – 3 | 1 |
| | | 3 114 51 | Keor MP BATT CABINET 10-20kVA-2 | 1 |
| **20** | 57 | 3 114 36 | Keor MP 20KVA – 3 | 1 |
| | | 3 114 50 | Keor MP BATT CABINET 10-20kVA-1 | 1 |
| | | 3 114 51 | Keor MP BATT CABINET 10-20kVA-2 | 1 |
| **20** | 65 | 3 114 36 | Keor MP 20KVA – 3 | 1 |
| | | 3 114 51 | Keor MP BATT CABINET 10-20kVA-2 | 2 |
| **20** | 78 | 3 114 36 | Keor MP 20KVA – 3 | 1 |
| | | 3 114 50 | Keor MP BATT CABINET 10-20kVA-1 | 1 |
| | | 3 114 51 | Keor MP BATT CABINET 10-20kVA-2 | 2 |
| **20** | 88 | 3 114 36 | Keor MP 20KVA – 3 | 1 |
| | | 3 114 51 | Keor MP BATT CABINET 10-20kVA-2 | 3 |
| **30** | 26 | 3 114 39 | Keor MP 30kVA - 2 | 1 |
| | | 3 114 52 | Keor MP BATT CABINET 30kVA | 1 |
| **30** | 46 | 3 114 39 | Keor MP 30kVA - 2 | 1 |
| | | 3 114 52 | Keor MP BATT CABINET 30kVA | 2 |
| **30** | 57 | 3 114 39 | Keor MP 30kVA - 2 | 1 |
| | | 3 114 52 | Keor MP BATT CABINET 30kVA | 3 |
| **40** | 26 | 3 114 42 | Keor MP 40kVA – 2 | 1 |
| | | 3 114 53 | Keor MP BATT CABINET 40kVA | 1 |
| **40** | 38 | 3 114 42 | Keor MP 40kVA – 2 | 1 |
| | | 3 114 53 | Keor MP BATT CABINET 40kVA | 2 |
| **40** | 51 | 3 114 42 | Keor MP 40kVA – 2 | 1 |
| | | 3 114 53 | Keor MP BATT CABINET 40kVA | 3 |

# Keor MP 10 – 80 kVA

**Three- Phase UPS**

## Characteristics

| General specifications | 3 114 25<br>3 114 26<br>3 114 27<br>3 114 28 | 3 114 29<br>3 114 30<br>3 114 31<br>3 114 32 | 3 114 33<br>3 114 34<br>3 114 35<br>3 114 36 | 3 114 37<br>3 114 38<br>3 114 39 | 3 114 40<br>3 114 41<br>3 114 42 | 3 114 43<br>3 114 44<br>3 114 45 | 3 114 46<br>3 114 47 |
|---|---|---|---|---|---|---|---|
| Nominal Power [kVA] | 10 | 15 | 20 | 30 | 40 | 60 | 80 |
| Active power (kW) | 10 | 15 | 20 | 30 | 40 | 60 | 80 |
| Technology | On-Line Double Conversion VFI SS 111 | | | | | | |
| Waveform | Sinusoidal | | | | | | |
| UPS architecture | Monolithic, Transformer Free | | | | | | |
| Parallel | Yes, up to 4 units | | | | | | |
| **Input specifications** | | | | | | | |
| Input voltage [V] | 380-400-415V 3PH+N | | | | | | |
| Input Voltage Range | +15% -20% | | | | | | |
| Input frequency [Hz] | 50/60 Hz | | | | | | |
| Input frequency tolerance [Hz] | (40-70)Hz | | | | | | |
| THD Input current [%] | <4 | <2 | | | <3 | <4 | |
| Input power factor | 0,99 | | | | | | |
| **Output specifications** | | | | | | | |
| Output voltage [V] | 380-400-415V 3PH+N | | | | | | |
| Output frequency (nominal) | ±0.1% Free Run | | | | | | |
| Crest Factor | up to 3:1 | | | | | | |
| THD Output voltage | <2% Linear Load | | | | | | |
| Output Voltage Tolerance | ±1% | | | | | | |
| Bypass | Static Automatic and Manual | | | | | | |
| Overload capacity | in VFI mode | | | | | | |
| @125% Load | 10 min | | | | | | |
| @150% Load | 1 min | | | | | | |
| Efficiency (AC-AC) [%] | up to 95% | | | | | up to 96% | |
| ECO Mode efficiency [%] | 98% | | | | | | |
| **Batteries** | | | | | | | |
| Battery Type VRLA | VRLA 12V-9Ah | | | | | | |
| Nominal Battery Voltage | 480 VDC | | | | | | |
| Internal batteries | Yes, Up to 120 | | | | | Yes, Up to 160 | |
| Recharge Current [A] | 12 | | | | | 18 | |
| Backup time expansion | Yes, with dedicated external battery cabinet | | | | | | |
| **Communication and management** | | | | | | | |
| Display | Touch Screen 5" | Touch Screen 5" | Touch Screen 5" | Touch Screen 5" | Touch Screen 5" | Touch Screen 7" | Touch Screen 7" |
| Communication Ports | Multiple communication interface: USB, RS232, RS485, Parallel port, Drycontact, Intelligent slot, (Optional: SNMP card, Relay card) | | | | | | |
| Auxiliary signal | EPO, Temperature probe input , Genset, Ext Bypass, Ext Batt Connection | | | | | | |
| Distribution switches | Input, Output, Manual Bypass, Battery (fuse holder) | | | | | | |
| **Mechanical characteristics** | | | | | | | |
| UPS Measurements WxHxD [mm] | 400 x 1168 x 985 | | | | | 600 x 1475 x 1023 | |
| UPS Net Weight without batteries [kg] | 94 | 126 | | 225 | | 441 | |
| Battery Cabinet Measurements WxHxD [mm] | 250 x 836 x 780 | | | | | - | |
| Battery Cabinet Net Weight without batteries [kg] | 47.7 | 47.7 | 47.7 | 47.7 | 47.7 | - | |
| Colour | White and Black | | | | | | |
| Wheels | Yes | | | | | | |
| Packaging | Carton Box on Pallet | | | | | | |
| **Ambient conditions** | | | | | | | |
| Operating Temperature [°C] | 0 - 40°C | | | | | | |
| Operating Humidity | IP20 | | | | | | |
| Relative humidity [%] | 0-95% (Not Condensing) | | | | | | |
| Noise level at 1 m [dBA] | <65dBA | | | 30-40KVA: <68dBA | | 60-80KVA: <75dBA | |
| Maximum Heat Loss [BTU/h] | 2054 | 3695 | | 8284 | | 14535 | |
| Maximum Altitude without derating [m above the sea level] | 1000 | | | | | | |
| **Conformity** | | | | | | | |
| Safety | IEC 62040-1 | | | | | | |
| EMC | IEC 62040-2 | | | | | | |
| Performance | IEC 62040-3 | | | | | | |

# Keor MP 60 – 200 kVA

**Three- Phase UPS**

## Characteristics

- Power factor correction PFC (input PF>0,99)
- User friendly 7'' touch screen display
- Wide input voltage range and frequency
- Dual Input
- Cold Start
- Embedded Backfeed Protection
- Genset port
- Parallel Operation up to 6 units
- VRLA (3Wire) 20 blocks and 40 blocks (only external batteries)
- Common battery connection
- Li-Ion (TP100, TP120)
- Overload & short circuit protection
- Powerful Built-in Charger 20-40-60A
- Advanced battery management (ABM)
- Embedded RS232, RS485, SNMPSlot, parallel port, dry contact
- Wheels for easy movement

| Item | UPS | |
|---|---|---|
| | Power (kW) | Description |
| 3 112 35 | 60 | Keor MP 60 |
| 3 112 37 | 80 | Keor MP 80 |
| 3 112 39 | 100 | Keor MP 100 |
| 3 112 40 | 120 | Keor MP 120 |
| 3 112 41 | 160 | Keor MP 160 |
| 3 112 42 | 200 | Keor MP 200 |

| Item | Accessories |
|---|---|
| 3 112 51 | SNMP card |
| 3 112 52 | Additional dry contact card |
| 3 112 53 | Load bus sync and battery sensor cable |
| 3 112 54 | Gsm modem |
| 3 112 44 | Battery temperature sensor |
| 3 112 45 | Remote alarm panel |
| 3 112 46 | External kit repo |

## Characteristics

**Keor MP 60**

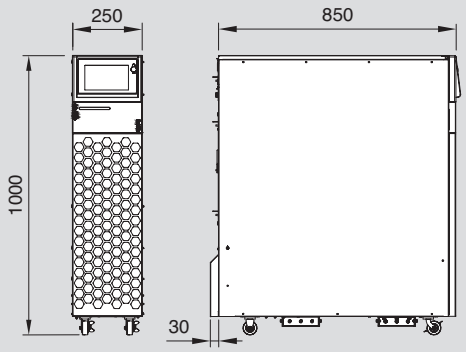


**Keor MP 80-200**

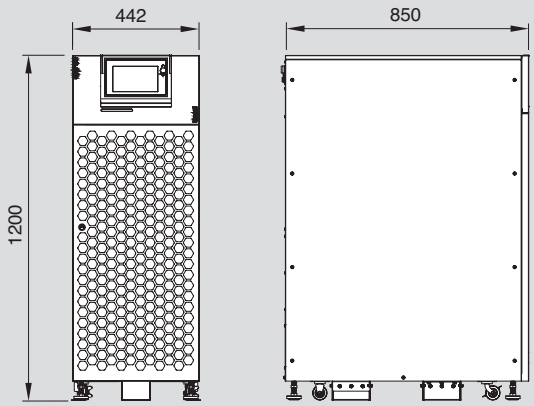

# Keor MP 60 – 200 kVA

**Three- Phase UPS**

## Characteristics

| General specifications | 3 112 35 | 3 112 37 | 3 112 39 | 3 112 40 | 3 112 41 | 3 112 42 |
|---|---|---|---|---|---|---|
| Nominal Power [kVA] | 60 | 80 | 100 | 120 | 160 | 200 |
| Active power (kW) | 60 | 80 | 100 | 120 | 160 | 200 |
| Possible Classification | True Online Double Conversion, VFI - SS - 111 | | | | | |
| Possible configuration | 3 phase + N + PE | | | | | |
| Specifications | UPS with fault tolerance | | | | | |
| **Input specifications** | | | | | | |
| Input voltage | 380-400-415 VAC | | | | | |
| Input voltage range | 310~480 VAC at full load | | | | | |
| Input frequency | 50 / 60 Hz (40 to 70 Hz) | | | | | |
| Input phases | 3 phase + N + PE | | | | | |
| Input THDi (at rated linear load) | < 3% | | | | | |
| Input power factor | 0.99 | | | | | |
| **Output specifications** | | | | | | |
| Nominal Output voltage | 380/400/415 VAC | | | | | |
| Output Voltage Regulation | ±1 (Balanced Load) | | | | | |
| Output Power Factor | 1 | | | | | |
| Output frequency | 50/60 Hz | | | | | |
| Crest Factor | 3:1 | | | | | |
| Output Voltage THD | <2% for Linear Load & < 4% for Non Linear load | | | | | |
| Efficiency at rated load | Up to 96% | | | | | |
| Efficiency on Eco mode | Up to 99% | | | | | |
| Permitted overload on mains (PF=1)* | ≤110% @ 30 mins, ≤125% @ 10min, ≤150% @ 1min | | | | | |
| Bypass | Inbuilt Static & Maintenance Bypass | | | | | |
| **Communication and management** | | | | | | |
| Cabinet displays | 7'' Touch screen color display cabinet and Multicolor status indicator (green/yellow/red) | | | | | |
| Communication ports | MODBUS RS485/RS232//USB/Ethernet/SNMP, & Dry Contacts (optional) | | | | | |
| Cold start | Yes | | | | | |
| Maximum number of parallel chassis | Max 6 cabinets | | | | | |
| EPO | Yes | | | | | |
| Alarm & Signals | Configurable acoustic alarms and signals | | | | | |
| Temperature Sensor | Yes, optional | | | | | |
| Safety and Protection | Overload, Short circuit, Back feed port available (external connectional optional) all MCCBs, Over & Low voltage, Fast acting fuses | | | | | |
| **Batteries** | | | | | | |
| Internal batteries | No, external batteries only | | | | | |
| Battery type/range voltage | VRLA, Ni Cd & Li-ion | | | | | |
| Nominal Battery Voltage | 432 VDC~600 VDC | | | | | |
| Charging mode | 3 stage advanced cycle | | | | | |
| **Mechanical characteristics** | | | | | | |
| Overall Net weight (Kgs) | 110 | 140 | 160 | 170 | 205 | 220 |
| Frame Dimensions (W X D X H) in mm | 250 x 850 x 1000 | 442 x 850 x 1200 | | | | |
| Ingress Protection | IP20 | | | | | |
| Color Shade | RAL 9005+9003 | | | | | |
| Cable entry | 60-160 kVA rear bottom entry, 200 kVA front & rear bottom entry | | | | | |
| **Ambient conditions** | | | | | | |
| Operating Temperature [°C] | 0 - 40°C | | | | | |
| Operating Humidity | 20% - 95% non- condensing | | | | | |
| Operating Altitude | Up to 1000 m above sea level without derating | | | | | |
| Storage Temperature | 20 - 55 °C | | | | | |
| Maximum noise audible at 1m [dBA] | 58 | 60 | 62 | 62 | 63 | 66 |
| **Conformity** | | | | | | |
| Safety | IEC 62040-1 | | | | | |
| EMC | IEC 62040-2 | | | | | |
| Performance | IEC 62040-3 | | | | | |
| Environmental | IEC 62040-4 | | | | | |
| Declarations | RoHS / REACH | | | | | |

# CUSTOMER SERVICES

## Reliable

Directly present in more than 70 countries and servicing its products in more than 150 countries worldwide, a team of qualified engineers is available to support your UPS system to ensure power quality and availability to the most critical loads.

## Excellent

Legrand's competitive edge lies in its ability to provide high value-added UPS systems and services for both end users and business partners.
For Legrand, creating value means coming up with solutions for lower energy consumption, but also integrating product design into the overall development process. With around 200 000 catalogue items, the Group also provides all products required for electrical and digital building installations, particularly as integrated systems, finding solutions to fit everyone's needs.

## Tailor-made

Legrand offers a complete range of specific solutions and services to meet customer requirements:

- Technical pre-sales support at the project design stage
- Factory acceptance test
- Supervision of installation, testing and commissioning, site acceptance test
- Operator training
- Site audit
- Warranty extension
- Annual maintenance contract
- Fast intervention on emergency call

# SUPPORT

**SITE INSPECTION, INSTALLATION SUPERVISION.**
We perform a comprehensive check of the UPS environment to ensure safety and fault-free operation.
Our technical experts give manufacturer's recommendations to the site engineer or electrical contractors, and supervise the UPS installation before load power-up.

**SITE TEST, FACTORY TEST, COMMISSIONING**
Our Service Engineers conduct rigorous site tests and full setting-up of the UPS system before going live. They also perform Site Acceptance Test (SAT) and Factory Acceptance Test (FAT) according to your requirements. Commissioning operations for all UPS are carried out by qualified engineers to guarantee seamless start-up. After the final handing over of the UPS system, a Test and Commissioning report is delivered to you.

# TRAINING

We offer on-site training to ensure your equipment's safe and efficient operation.
Troubleshooting courses are also available in our plants for intensive hands-on practice on UPS training equipment.

# MAINTENANCE

**PREVENTIVE MAINTENANCE**
Electronic equipment and power systems, such as UPS, contain life-limited components and parts that must be replaced according to the manufacturer's specifications.
To ensure optimal performance and to protect your critical application from potential downtime, it is crucial to perform preventive maintenance operations on a regular basis and replace parts when needed. Our Service Contracts include cleaning, IR thermography, measurements, functional tests, event log and power quality analysis, battery health check, hardware and software upgrades, and technical reports.
A Preventive Maintenance Plan is one of the most cost-effective actions that can preserve your initial investment and ensure your business continuity.

**CORRECTIVE MAINTENANCE, EMERGENCY CALL**
In the event of an Emergency Call, our worldwide service network, with engineers and spare-parts stocks strategically located as close as possible to your site, guarantees a fast intervention time with 24/7/365 assistance.
After connecting his laptop to your UPS, very powerful diagnostic software helps our engineer to identify the fault, thus ensuring short MTTR (Mean Time To Repair).
Corrective actions are performed such as part replacement, adjustments and upgrades to return the UPS system back to normal operation.

# NOTES

legrand

facebook.com/legrand | linkedin/legrand | X.com/legrand | pinterest.com/legrandgroup | youtube.com/user/legrand | instagram.com/legrandnews | legrandgroup.com

**Head Office**
**and International Department**
87045 Limoges Cedex - France
Phone: + 33 (0) 5 55 06 87 87
www.ups.legrand.com

legrand®

AD-EXLGUPS-MP26B/GB - 09/2026